OWL

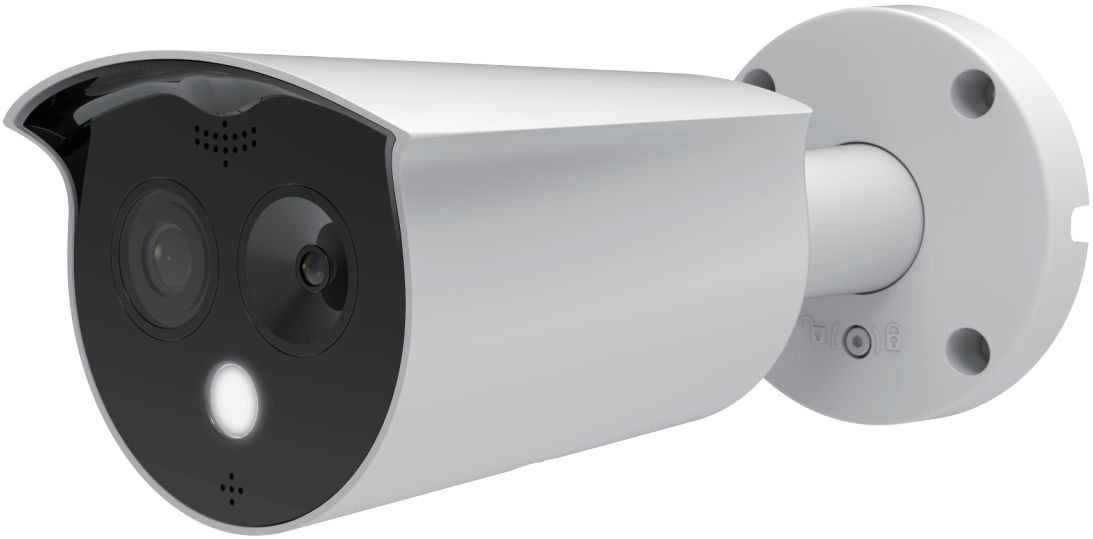

Features

Aesthetic design

IP66

Material: Aluminum & SECC & PC

Data Subject To Change Without Notice

Technical Specifications

Model	OWL
Material	Aluminum & SECC & PC
Dimension(WxHxD)	102.96 x 84.7 x 239.53 mm
Weight	1.1kg No Packaging
Color	White
Operating Temperature	-20ºC ~ +60ºC
Humidity	< 95% RH
Optional Accessory	B320 & A-frame

Dimensions (mm)

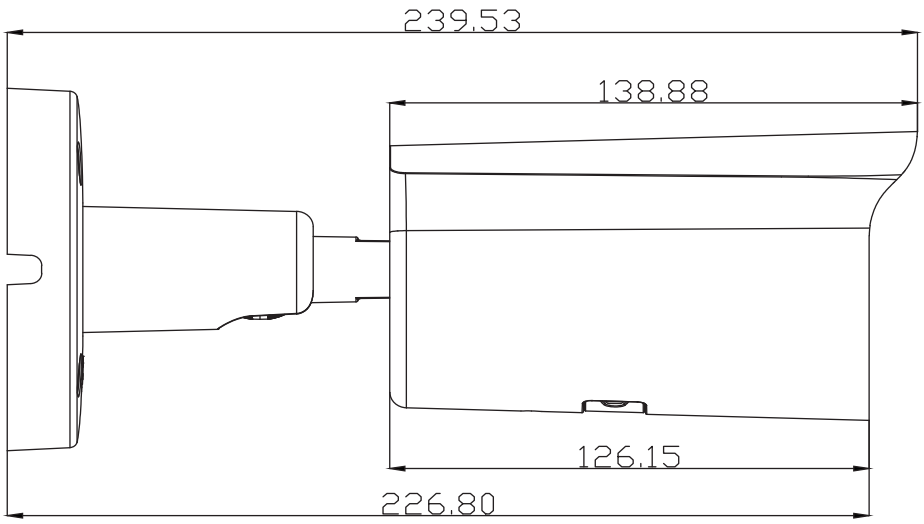

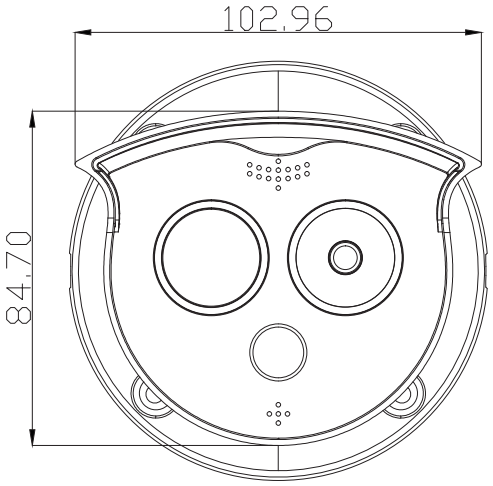

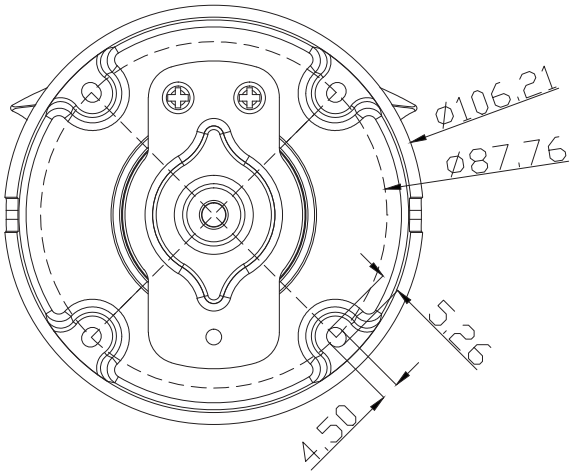

Packaging Information

M3.0 Wrench x 1

Screw pack x 1 : (1) M4 x 30, 4pcs;(2) Plastic expansion pipe, 4pcs

Sticker x 1

Data Subject To Change Without Notice